PRODUCT DATA SHEET

Date created: 06/11/2019

Ultra Flat S 1200x900x30mm Shower Tray

ILLUSTRATED

K8230 Ultra Flat S 1200x900x30mm Shower Tray - Pure White
L6307 Idealite top access shower tray waste and trap

OPTIONS

KV169 Ultra Flat S Shower Tray Waste Cover - Pure White

ILLUSTRATED PRODUCT DETAILS

Sizes

K8230 l:900 x w:1200

Weights

K8230 39.00 KG
L6307 0.42 KG

Materials

L6307 Idealite

Finishes

K8230 Pure White (FR)

L6307 Chrome (AA)

FINISH OPTIONS

(FR) Pure White
(FS) Concrete Grey
(FT) Sand
(FV) Jet Black

Standards

EN 14527

Special Notes

Must be ordered with waste L6307AA

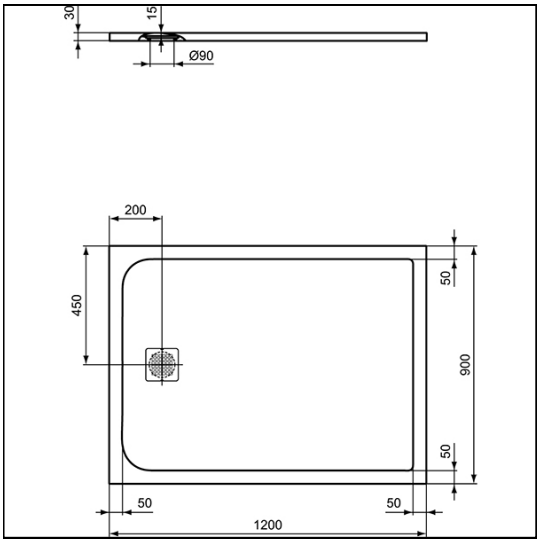

ACCREDITATIONS

E: info@idealspec.co.uk | T: 0870 122 8822 | F: 0870 122 8282 | www.idealspec.co.uk

Ideal Standard (UK) Ltd. makes every effort to ensure that the information provided on its website is accurate.
However, we cannot guarantee this, and accept no liability for any information or advice given via its website.